Signalling lamps LA5 front

TECHNICAL DATA / FEATURES

dimensions:	162x77x72
light function:	parking, direction indicator
lamp function markings:	A, 5, 1
traffic:	right-hand / left-hand
source of light:	PY21W and R5W
maximum power:	21W, 5W
nominal voltage:	12V-24V DC
optics:	FF
IP rating:	IP55
mounting:	rear, bottom, side
housing's material:	plastic
housing's colour:	black
lens' material:	plastic
built-in connectors:	-
other:	shock absorbing system

ADDITIONAL INFORMATION

To be mounted at the front of the tractor or slow-moving vehicle. They shall be installed on a vehicle in horizontal position, as left-side or right-side mounted.

It is possible to install needed connectors on wire (on request).

Useful parts while installing:
lamp cover - cat. No. 071.012.05.05 (Zetor)

Dedicated application for tractors:
A - Zetor: Proxima and Forterra
B - Ursus, Farmtrac
C - Terrion ATM 7360

DIMENSIONS

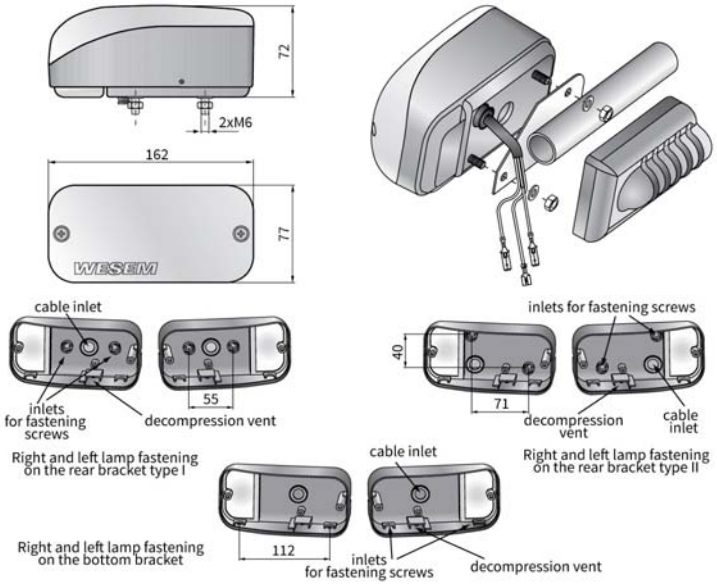

Cat. number	Homologation code	Accessories	bulb PY21W 12V	bulb R5W 12V	cable 0,15 m	cable 1,4 m	cable 1,6 m	cable 2,3 m	Connectors	AMP Faston 250	AMP Superseal 1,5	Cap / Pin	Mounting	rear	bottom	side	Side	right	left	Application	dedicated	Packaging / pc	carton box
LA5.39804	045													✓				✓			A		1
LA5.39805	045		✓	✓	✓					✓		3		✓				✓			A		1
LA5.39800	045													✓					✓		A		1
LA5.39801	045		✓	✓	✓					✓		3		✓					✓		A		1
LA5.39822	045													✓				✓			B		1
LA5.39829	045		✓	✓										✓				✓			B		1
LA5.39825	045		✓	✓	✓					✓		3		✓				✓			B		1
LA5.39803	045		✓	✓			✓							✓				✓			B		1
LA5.39807	045		✓	✓				✓						✓				✓			B		1
LA5.39820	045													✓					✓		B		1
LA5.39828	045		✓	✓										✓					✓		B		1
LA5.39821	045		✓	✓	✓					✓		3		✓					✓		B		1
LA5.39802	045		✓	✓		✓				✓		3		✓					✓		B		1

Cat. number	Homologation code	Accessories	bulb PY21W 12V	bulb R5W 12V	cable 0,15 m	cable 1,4 m	cable 1,6 m	cable 2,3 m	Connectors	AMP Faston 250	AMP Superseal 1,5	Cap / Pin	Mounting	rear	bottom	side	Side	right	left	Application	dedicated	Packaging / pc	carton box
LA5.39806	045		✓	✓				✓		✓		3		✓					✓		B		1
LA5.39824	045														✓			✓			B		1
LA5.39827	045		✓	✓	✓					✓		3			✓			✓			B		1
LA5.39823	045														✓				✓		B		1
LA5.39826	045		✓	✓	✓					✓		3			✓				✓		B		1
LA5.39815	045				✓											✓		✓					1
LA5.39817	045		✓	✓	✓					✓		3				✓		✓					1
LA5.39814	045				✓											✓			✓				1
LA5.39816	045		✓	✓	✓					✓		3				✓			✓				1
LA5.39811	045						✓				✓	3				✓		✓			C		1
LA5.39813	045		✓	✓			✓				✓	3				✓		✓			C		1
LA5.39810	045						✓				✓	3				✓			✓		C		1
LA5.39812	045		✓	✓			✓				✓	3				✓			✓		C		1